GAST

Motor Mounted Rotary Vane

Oilless 1531 Series

1.5
CFM

ModeL 1531 Series (Ac &12 Volt)

20 inHg max. vacuum
1.5 CFM open flow
10 psi max. pressure

Product Features

- Oilless operation
- Motor mounted
- Rugged construction/low maintenance
- Essentially pulse-free service

Includes

- Muffler/filter AA922H
- Thermal protector (on AC models only)

Recommended Accessories

- Vacuum relief valve Aa204
- Vacuum gauge Aa641
- Pressure relief valve Aa203
- Pressure gauge Aa644b
- Repair kit K219

Product Dimensions (inches, mm)

Dimensions are for reference only

Model 1531 (AC Motor)

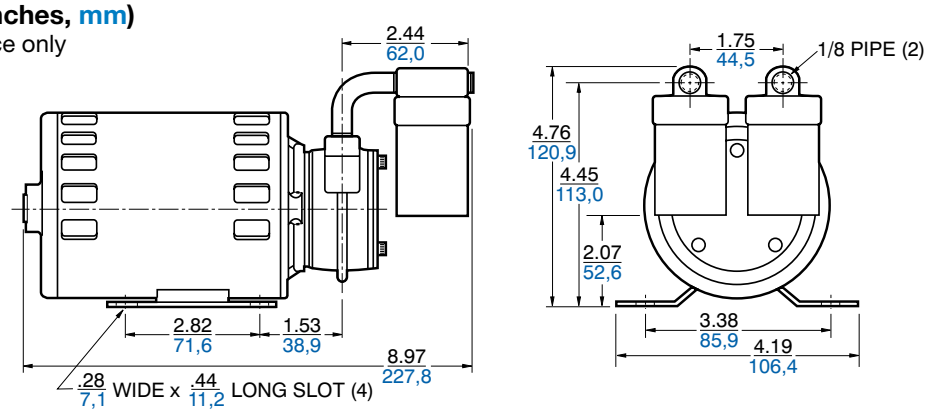

Product Specifications

Note: All models listed can be used as either a vacuum pump or compressor.

Model Number	Motor	RPM 60 cycle	RPM 50 cycle	HP	kW	Thermal Protector	Net Weight lbs	Net Weight kg
1531-107B-G288X	100-110/100-115-50/60-1	3450	2850	1/10	0,07	•	8	3,6
1531-107B-G617	12 Volt DC	3450		1/8	0,09		9	4,1
1531-107B-G289X	220-240/230-50/60-1	3450	2850	1/10	0,07	•	7	3,2
1531-107B-G557X†	115-60/50-1	3450	2850	1/10	0,07	•	7	3,2

†Includes 10 ft. cord and switch.
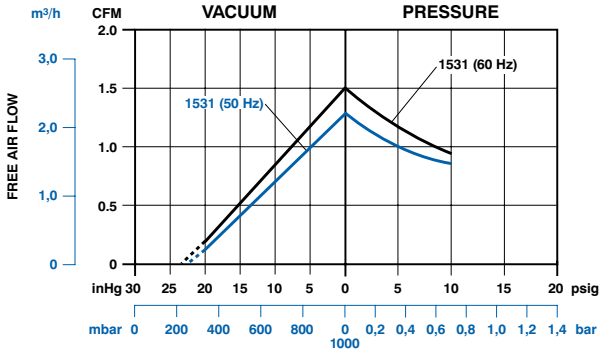
Product Performance