NOTIFIER by Honeywell

12 Clintonville Road
Northford, CT 06472-1653
Phone: 203.484.7161

FMM-1 Monitor Module

SPECIFICATIONS

Normal Operating Voltage:	15 to 32 VDC
Maximum Current Draw:	5.0 mA (LED on)
Average Operating Current:	375 µA (group poll); 350 µA (direct poll); 600 µA Max. (Communicating, IDC Shorted)
EOL Resistance:	47K Ohms
Maximum IDC Wiring Resistance:	1,500 Ohms
Maximum IDC Voltage:	11 Volts
Maximum IDC Current:	450µA
Temperature Range:	32°F to 120°F (0°C to 49°C)
Humidity:	10% to 93% Non-condensing
Dimensions:	4½″ H x 4″ W x 1¼″ D (Mounts to a 4″ square by 2⅛″ deep box.)
Accessories:	SMB500 Electrical Box

BEFORE INSTALLING

This information is included as a quick reference installation guide. Refer to the control panel installation manual for detailed system information. If the modules will be installed in an existing operational system, inform the operator and local authority that the system will be temporarily out of service. Disconnect power to the control panel before installing the modules.

NOTICE: This manual should be left with the owner/user of this equipment.

GENERAL DESCRIPTION

The FMM-1 Monitor Module is intended for use in intelligent, two-wire systems, where the individual address of each module is selected using the built-in rotary switches. It provides either a 2-wire or 4-wire fault tolerant initiating device circuit (IDC) for normally open contact fire alarm and supervisory devices, or either normally open or normally closed security devices. The module has a panel controlled LED indicator. The FMM-1 can be used to replace an MMX-1 module in existing systems. FMM-1 is also UL Listed as a commercial proprietary burglar alarm accessory and a commercial central station burglar alarm accessory.

COMPATIBILITY REQUIREMENTS

To ensure proper operation, this module shall be connected to a compatible Notifier system control panel (list available from Notifier).

FIGURE 1. CONTROLS AND INDICATORS:

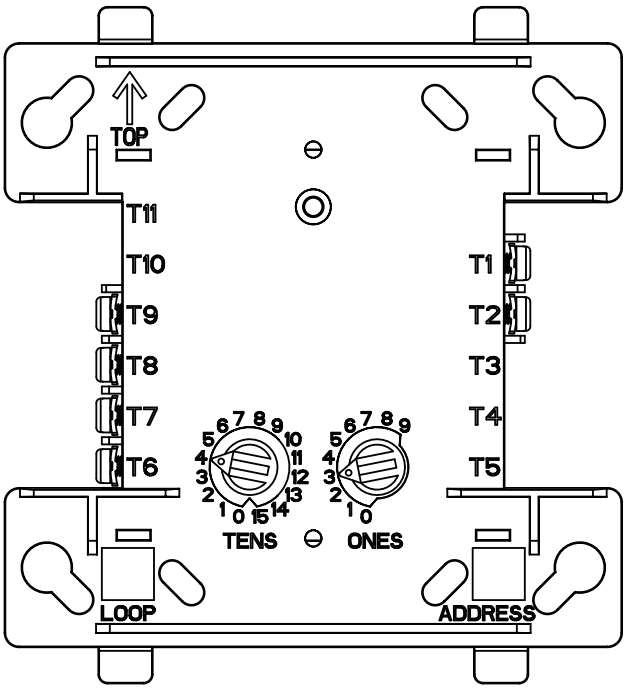

C1067-00

MOUNTING

The FMM-1 mounts directly to 4-inch square electrical boxes (see Figure 2). The box must have a minimum depth of 2⅛ inches. Surface mounted electrical boxes (SMB500) are available from Notifier.

FIGURE 2. MODULE MOUNTING:

NOTE: For UL Listed security installations, the FMM-1 must be mounted within the control panel enclosure.

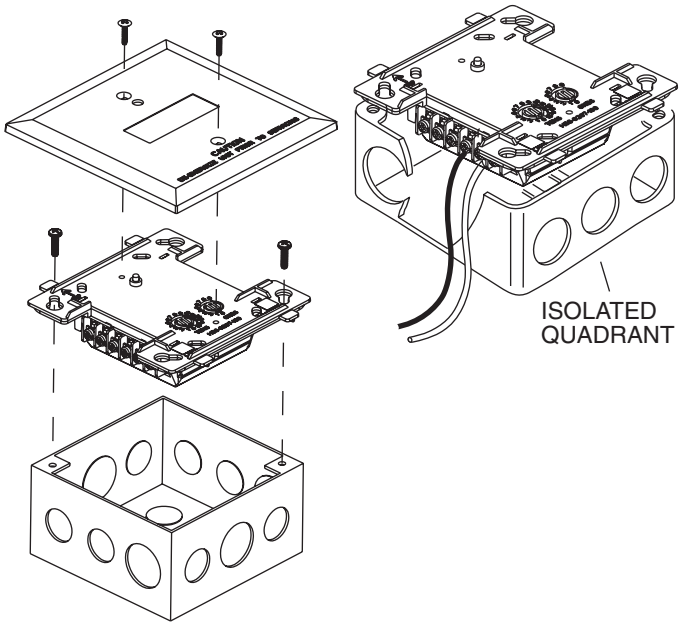

C1066-00

WIRING

NOTE: All wiring must conform to applicable local codes, ordinances, and regulations. This module is intended for power limited wiring only.

1. Install module wiring in accordance with the job drawings and appropriate wiring diagrams.
2. Set the address on the module per job drawings.
3. Secure module to electrical box (supplied by installer), as shown in Figure 2.

FIGURE 3. TYPICAL 2-WIRE INITIATING CIRCUIT CONFIGURATION, NFPA STYLE B OR SECURITY SYSTEMS:

NOTE: For UL Listed security installations, the FMM-1 must be mounted within the control panel enclosure.

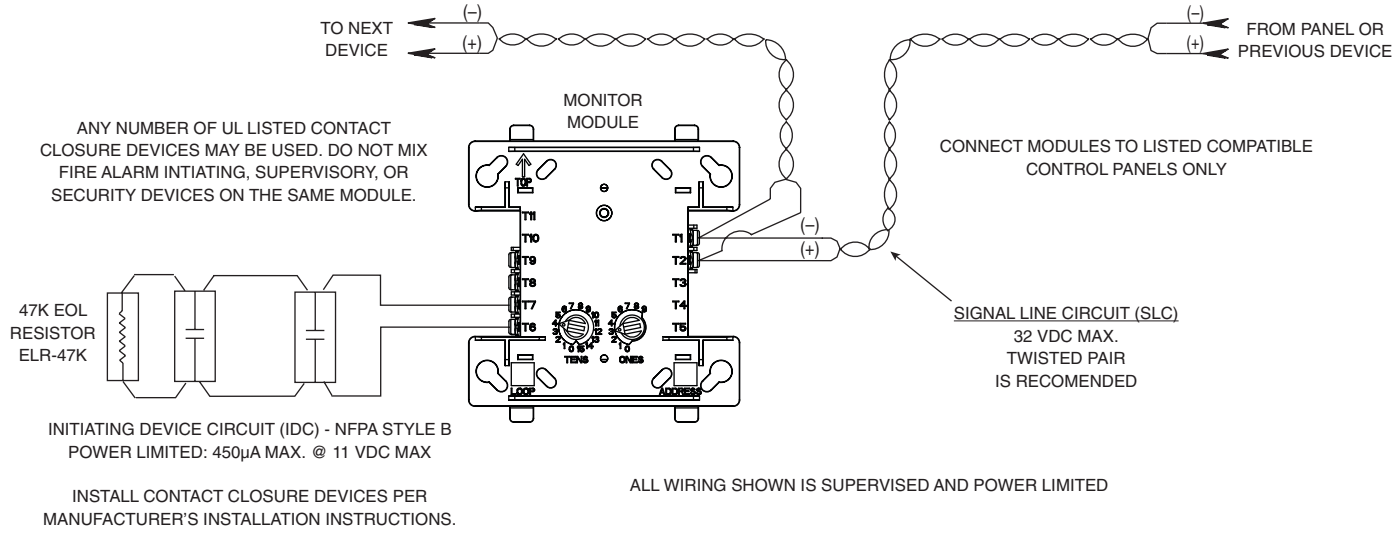

C0918-00

FIGURE 4. TYPICAL 4-WIRE FAULT TOLERANT INITIATING CIRCUIT CONFIGURATION, NFPA STYLE D:

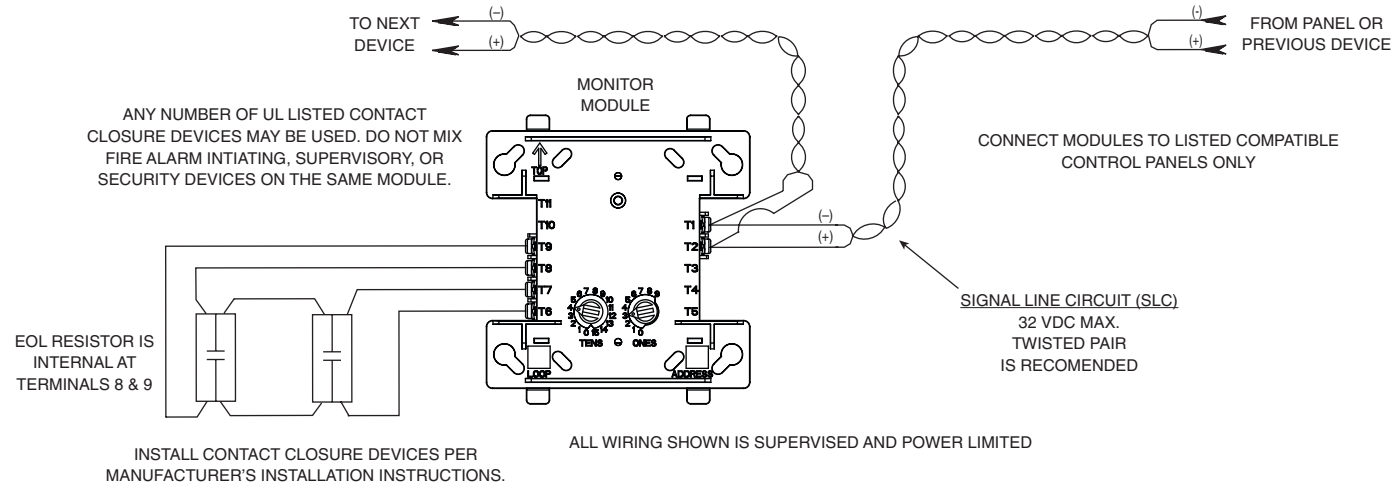

C0919-02

©2007 Notifier